PART NO	REV	SYMBOL	DESCRIPTION	LOCATED	REASON	SIGN	DATE
	A		FIRST RELEASE			Simon Ho	

Item	Part NO	Description	Q'Ty
1	60.L9001.001	ASSY-BEZEL	1
2	60.L9002.00	ASSY-REAR-COVER	1
3	60.L9003.00	ASSY-COLUMN	1
4	60.L9004.00	ASSY-BASE	1
5	60.L9005.00	ASSY-BKT-MAIN	1
6	34.L9002.00	D-SUB-COVER	1
7	42.L9008.00	SIDE-COVER	2
8	42.L9017.00	COVER-AC	1
9	42.L9016.00	HOLDER-INTER	1
10	86.WA314.8R0	SCREW M3*8mm	7
11	86.1A356.10	MACH M4*10 NYLON	2
12	86.00273.6R0	SCREW M3*6C-ZN	5
13	86.V7526.6R0	TAP M4*10 ZN	1
14	34.L9007.00	SPG-CTRL 0.2mm	1
15	86.5A524.6R0	SCREW M3*6 NI	4
16	86.20F84.019	SCREW	2
17	23.4L470.S0	speaker	2

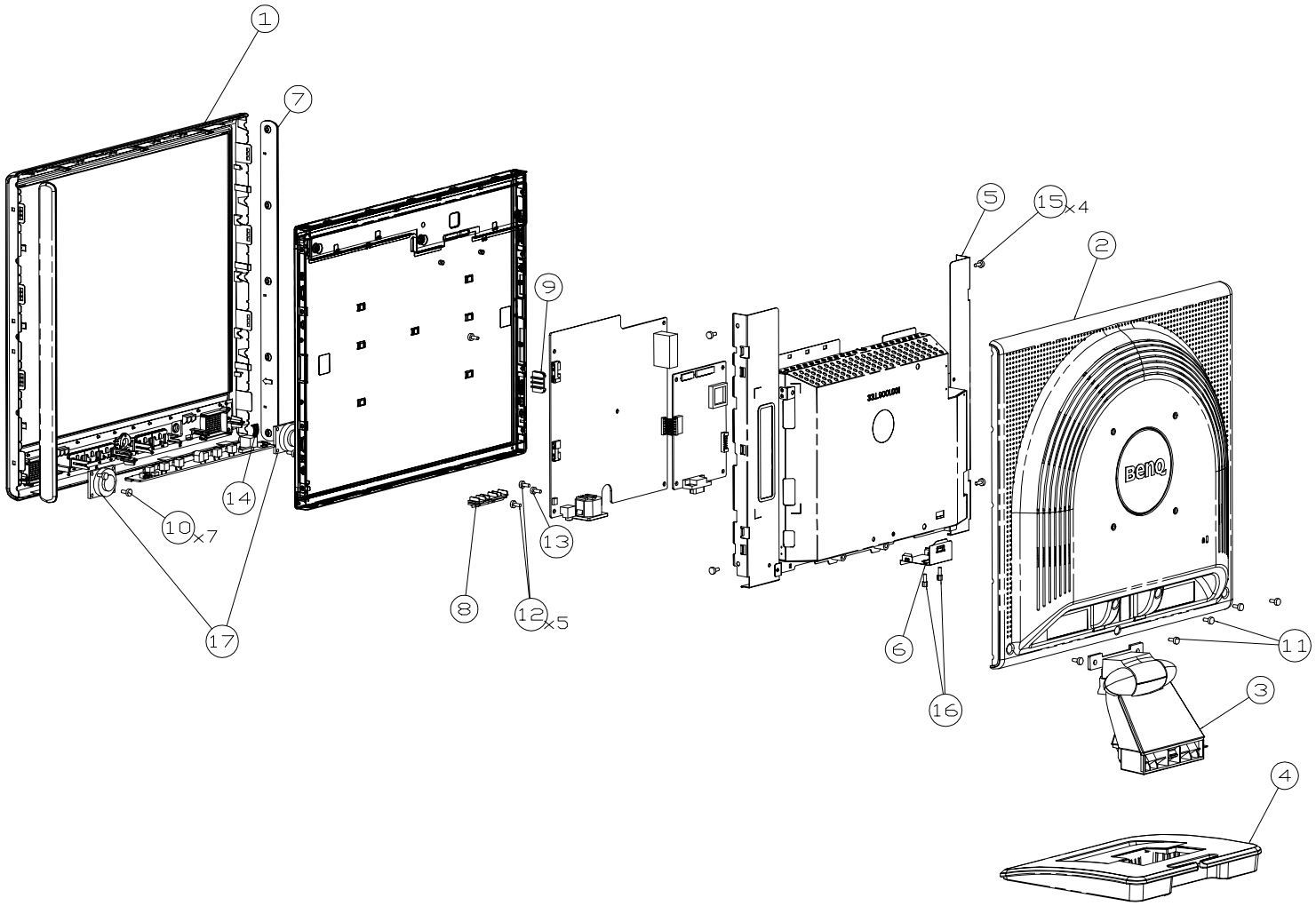

SCALE 0.600

MODEL	Q7C3	NAME	ASSY-EXPLODE		
DRN	Simon Ho	MATERIAL			
DSN	Simon Ho	FINISH			
CKD	Aaron Ho	SCALE		DIM IN	MM
APPD	Peter Wu	SHEET	1 OF 1	CAVITIES	

Benq Corporation

TOLERANCE UNLESS OTHERWISE SPECIFIED (X)

CLASS	A	B	C	D	E	F	G
< 8mm	0.05	0.1	0.1	0.2	0.2	0.4	0.4
8 - 25mm	0.05	0.15	0.15	0.3	0.3	0.6	0.6
25 - 80mm	0.1	0.2	0.25	0.4	0.5	0.8	1.0
80 - 250mm	0.25	0.3	0.4	0.6	0.8	1.0	1.5
250 - 800mm	0.3	0.4	0.6	1.0	1.5	2.0	3.0
> 800mm	1.0	1.0	1.5	1.7	3.0	4.0	6.0
ANGLE	0.5						
FILE NAME							
PART NO.							